LAKESIDE®

Item # _____

Quantity_____

Creation Express™

Mobile Cooking Station

Model 2075

Models

2060, 2065, 2070
2075, 2080, 2085

Add Efficiency And Safety To Your Demonstration Cooking

Benefits

- Flameless stoves provide safe efficient cooking
- State-of-the-art induction stoves are cool to the touch
- Mobility allows flexibility of cooking location

Features

- One-, two- and three-stove models available
- Built-in downdraft exhaust filtration system available
- ETL listed electrical components.
- Textured and solid color laminate exterior finishes available

Casters

- Non-marking cushion tread 5", all-swivel, two with brake

Spec. # _____

AIA # _____

Optional Demo Mirror

Optional Breath Guard

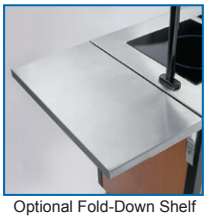

Optional Fold-Down Shelf

Optional Filtration Unit

Interior Storage Shelf

Specifications:

Shall be Lakeside Model 20__, and shall be of welded stainless steel construction, with decorative laminate exterior and hinged doors. Unit shall feature __ (1, 2, or 3) drop-in style induction or infrared stoves, with cooking controls mounted above doors on the side of cabinet. Magnetic induction stove(s) shall require 120 VAC, 12.8 amp (each), with 1800 watt output, easy to read LED power level indicators, and shall be ETL listed. Stoves shall include ceramic glass cooking surface, and control(s) shall feature variable cooking and holding functions. Unit top shall be of 16 gauge type 304 stainless steel, and unit sides shall be of 18 gauge stainless steel. Doors shall be of 47# high-density resin particle board with laminate finish, and shall be mounted with heavy-duty concealed, interior mounted cabinet hinges. Choice of standard laminate exterior finishes shall be included. Cabinet shall feature an 18 gauge stainless steel welded interior storage shelf. Casters shall be heavy-duty 5" all-swivel, two with brake, with rounded cushion tread non-marking tires. Casters shall be mounted to 4" wide channel style crossmembers of 14 gauge stainless steel. Unit base shall consist of 14 gauge crossmembers and channel style runners.

Filtration System:

Shall include (1 or 2) built-in downdraft air filtration unit(s) for cooking exhaust, with intake vents mounted to the back of the cooking surface. Filtration units shall feature 3-stage exhaust filtration system, including grease/particulate, smoke/fine particle, and gas/odor removal stages. Filtration unit(s) shall be UL and ANSI listed, and shall be mounted on pull-out glide mechanism to provide easy access for filter maintenance.

Lakeside Manufacturing, Inc.
4900 West Electric Avenue • West Milwaukee, WI 53219 U.S.A.
800-558-8565 • 414-902-6400 • Fax 414-902-6446 • info@eLakeside.com • www.eLakesideFoodservice.com

Lit# CREX 1116

Lakeside reserves the right to modify specifications or discontinue models without prior notification.

Printed in the U.S.A.

Models
2060, 2065, 2070
2075, 2080, 2085

Creation Express™
Mobile Cooking Station

Side View

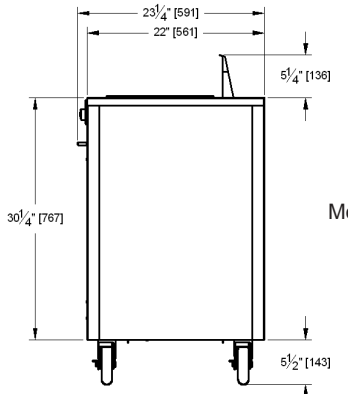

Model 2075

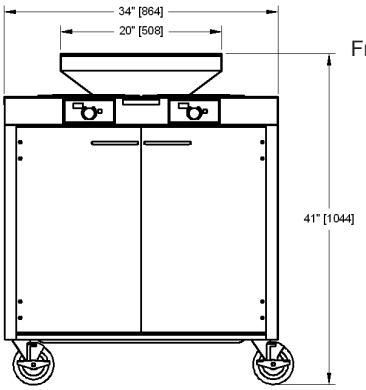

Front Views

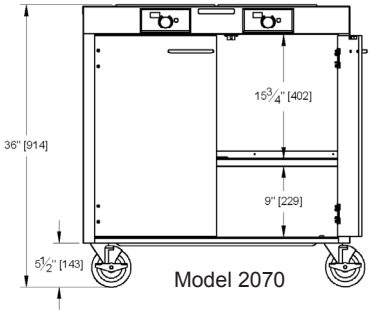

Model 2070

Top Views

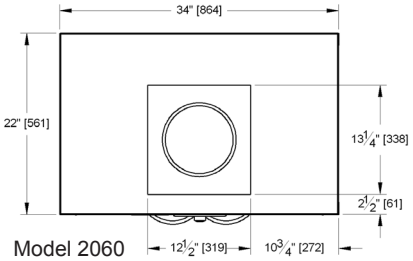

Model 2060

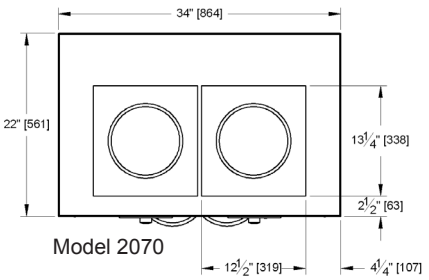

Model 2070

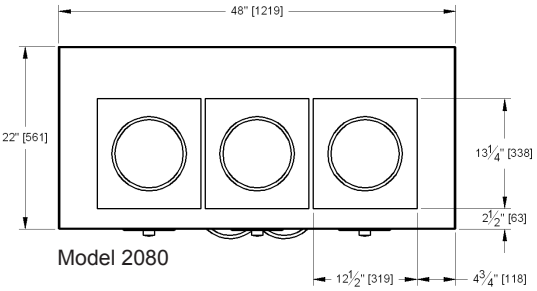

Model 2080

Spec. #

Product Information:

Model	Number Of Stoves	Number Of Filters	Overall Size W	Overall Size L	Overall Size H	Ship Weight Lbs	Ship Weight Kg
2060	1	-	34" (864	22" 559	35½" 901)	110	50
2070	2	-	34" (864	22" 559	35½" 901)	120	55
2080	3	-	48" (1219	22" 559	35½" 901)	210	96

Model	Number Of Stoves	Number Of Filters	Overall Size W	Overall Size L	Overall Size H	Ship Weight Lbs	Ship Weight Kg
2065	1	1	34" (864	22" 559	40½" 1028)	154	70
2075	2	1	34" (864	22" 559	40½" 1028)	164	75
2085	3	2	48" (1219	22" 559	40½" 1028)	298	136

Measurements in ( ) indicate metric millimeters, unless noted.

Electrical Information

Models with two or three stoves feature a power management package as standard and require 220 VAC 50 amp circuit with NEMA 14-50P plug. On units that do not include the power management package, each 120 VAC stove requires its own 20 amp circuit. Filter(s) can be included on each circuit. Units are available without Power Management Package.

Options:

- ☐ 220 VAC (2600W) induction stove(s)
- ☐ Custom laminate finish exterior: _____

AIA #

Available Finishes

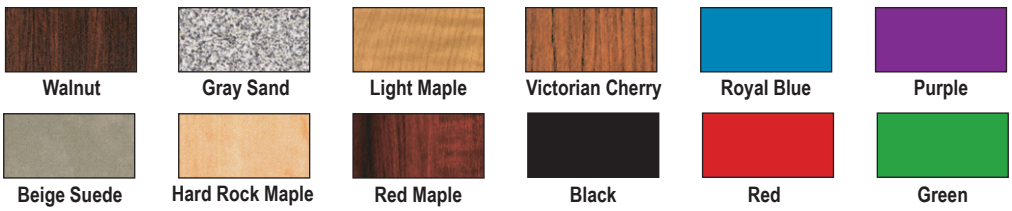

Finishes:

- ☐ Walnut
- ☐ Gray Sand
- ☐ Light Maple
- ☐ Red Maple
- ☐ Beige Suede
- ☐ Victorian Cherry
- ☐ Hard Rock Maple
- ☐ Black
- ☐ Royal Blue
- ☐ Purple
- ☐ Red
- ☐ Green
- ☐ Other_____

LAKESIDE®
MOVING FOODSERVICE FORWARD™

Lakeside Manufacturing, Inc.
4900 West Electric Avenue • West Milwaukee, WI 53219 U.S.A.
800-558-8565 • 414-902-6400 • Fax 414-902-6446
info@eLakeside.com • www.eLakesideFooservice.com

Lakeside reserves the right to modify specifications or discontinue models without prior notification.
Printed in the U.S.A.