INSTRUCTIONS FOR USE

HOT BLOX HOLDING CABINETS

TABLE OF CONTENTS

SECTION		PAGE
I.	Safety Instructions	2
II.	Identifying Your Cabinet	2
III.	Cabinet Sizes And Pan Capacities	3
IV.	Product Details	3
V.	Installation & Set-up	4
VI.	Care And Maintenance	4
VII.	Reversing The Door	5
VIII.	Cabinet Stacking	6
IX.	Operating Instructions	7
X.	Operating Instructions - Analog Controls	8
XI.	Operating Instructions - Digital Controls	9
XII.	Main Display	10
XIII.	Basic Troubleshooting	12
XIV.	Service & Replacement Parts	13
XV.	Warranty	18

DESCRIPTION

This manual covers cabinets with electrical ratings of:
120V 60Hz 875W & 220-240V 50/60Hz 735-875W.

SAFETY INFORMATION

WARNING: This cabinet is only for hot food holding applications.

WARNING: Follow all food safety guidelines. Pre-heat the cabinet to the desired temperature before placing hot cooked food into the cabinet. Food must be at the appropriate temperature before being placed into cabinet. Use a food probe to check internal food temperature - the cabinet temperature is not necessarily the internal food temperature.

WARNING: Do not block or hook anything into vent openings.

WARNING: Only factory approved service agents should attempt to service, repair or replace electrical components, wiring or power cord.

WARNING: Unplug the cabinet before cleaning or servicing. Do not wash the cabinet with a water jet or high pressure water, do not hose wash/spray interior.

WARNING: Food Service Equipment must be electrically grounded. Failure to ground Food Service Equipment may result in serious injury or death from electrical malfunction.

WARNING: If stacking cabinets, carefully follow the cabinet stacking instructions to avoid potential injury. See page 6 for stacking instructions.

CAUTION: Do not spray or pour water into the top of the cabinet (control enclosure). Unplug the cabinet before cleaning and then wipe with a damp cloth and dry with a towel. Use only cleaning agents approved for Aluminum and stainless steel.

SAFETY SYMBOLS

240V Units Only

IDENTIFYING YOUR CABINET

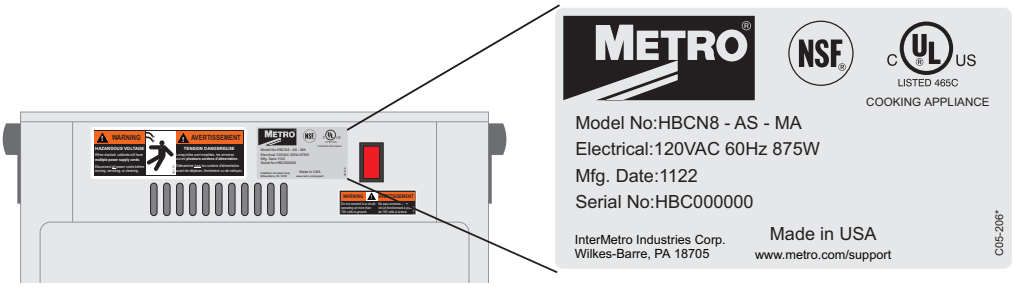

For future reference, note the serial and model number found on the data plate of the cabinet here:
Serial number _____
Date the cabinet was put into service _____
Fill out and return the warranty card located at the back of this manual.

PART NUMBERING

H B C N 8 - A X S - M A

- **HBC** — Hot Blox Cabinet
- **N** — Width: N- Narrow, W-Wide
- **8** — Slide Levels: 4, 8
- **A** — Controls: A- Analog, D- Digitals
- **X** — BLANK-120V, X- 220-240V
- **S** — Door: S- Solid, C-Clear
- **M** — Application: CT- Countertop, UC- Undercounter, M- Mobile, T- Transport
- **A** — Add "A" Suffix for cabinets with factory installed accessories

CABINET SIZES AND PAN CAPACITIES

Cabinet Size	Pan Capacities				
	12"x20" Steam - GN 1/1 Pans			Sheet Pans	
	2.5" / 65mm	4" / 100mm	6" / 150mm	13"x18"	18"x26"
N4	4	2	1	4	-
N8	8	4	3	8	-
N16	16	8	6	16	-
W8	8	4	3	16	8
W16	16	8	6	32	16

Note: if placing water pan on floor, pan capacity may drop one slide level in some instances.

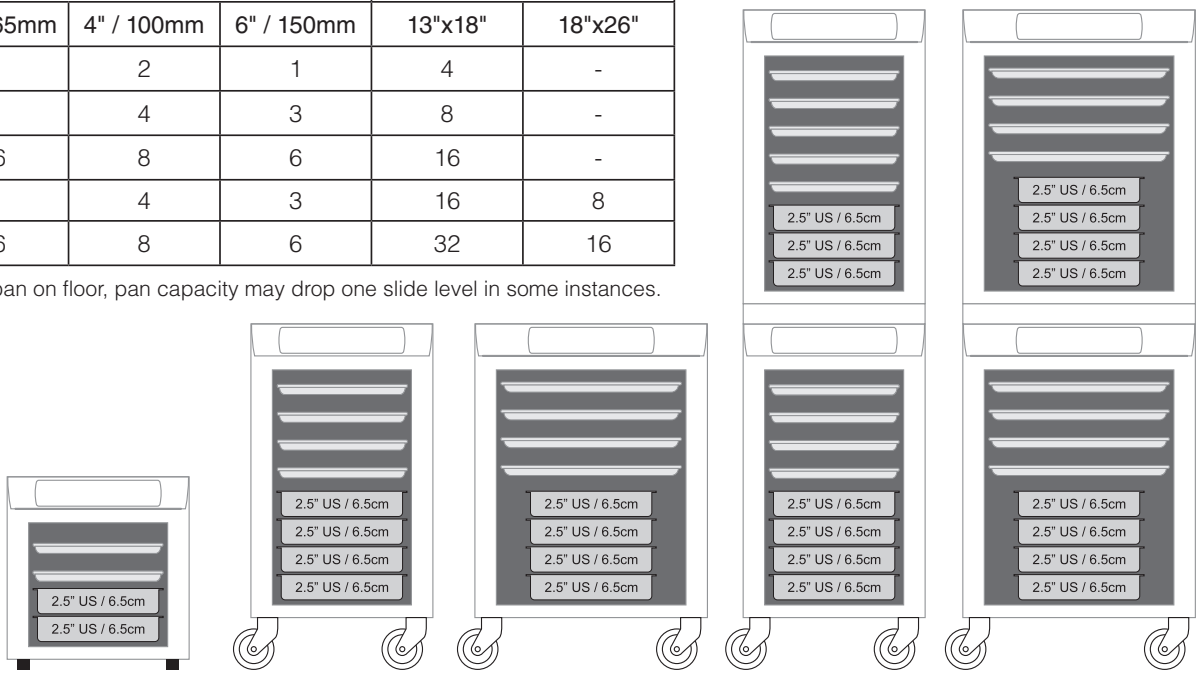

N4- Narrow 4 pans | **N8- Narrow 8 pans** | **W8- Wide 8 pans** | **N8- Stacked 16 pans** | **W8- Stacked 16 pans**

PRODUCT DETAILS

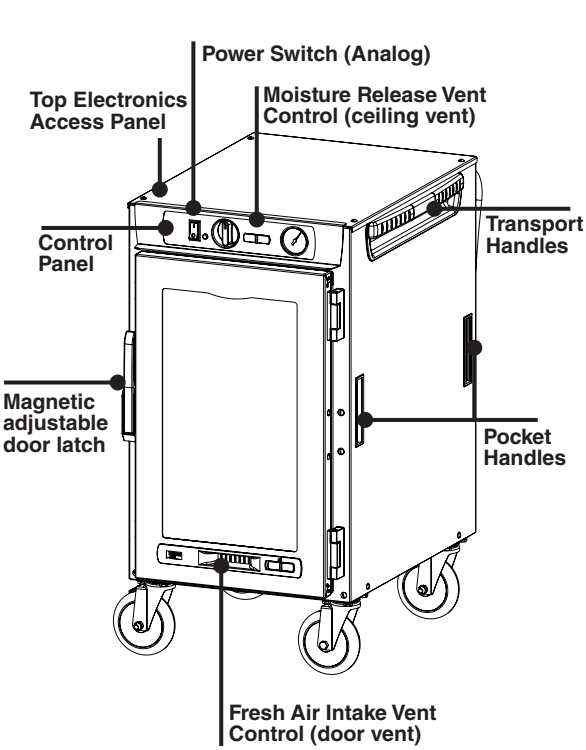

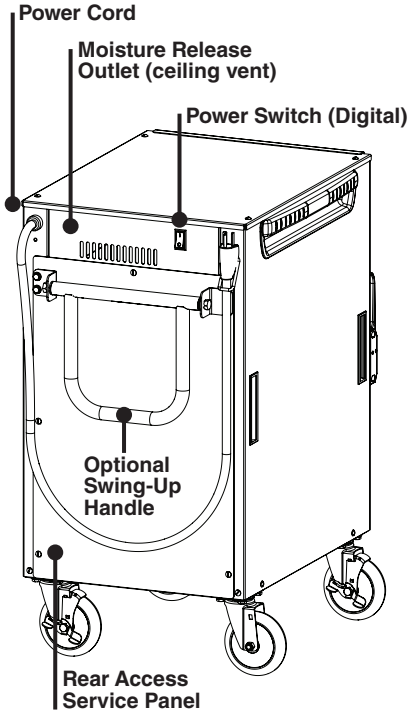

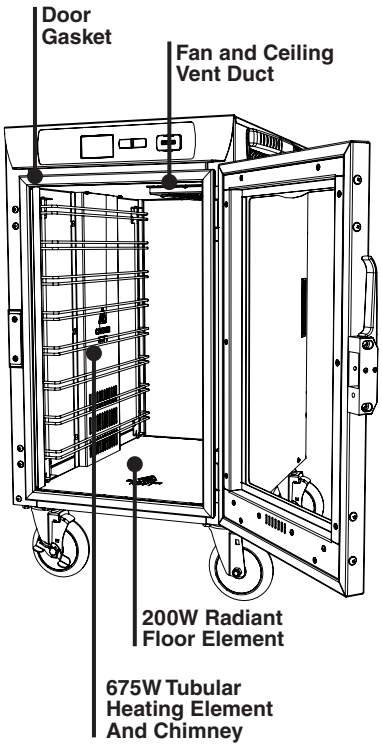

INSTALLATION AND SET-UP

1. Check the packaging and cabinet for shipping damage after unloading the unit, and after removing all the packaging.
2. The receiver of this product is responsible for filing freight damage claims. This equipment must be opened immediately for inspection. All visible damage must be reported to the freight company within 48 hours and must be noted on freight bill at the time of delivery.
3. Concealed damage is your responsibility — you must advise the carrier of any loss or damage within 15 days after receipt of the cabinet. If there is damage, retain the original packaging for inspectors.
4. Any protective covers (plastic or paper sheet) must also be removed before turning the cabinet on.
5. Refer to the data plate located near the power cord for the electrical specifications of the cabinet as shown on Page 2.
   - With the POWER switch OFF, plug the cord into the appropriate rated, grounded receptacle.
   - Cabinets rated at 120V must be plugged into a 15 amp or higher 125 VAC receptacle.
   - Cabinets rated at 220-240V must be plugged into a 15 amp 250V receptacle.

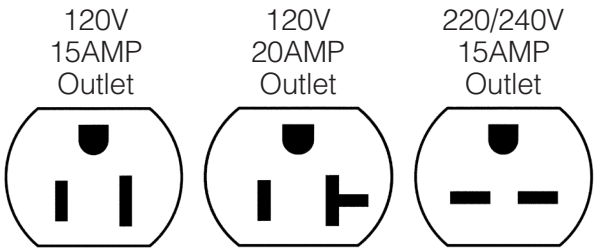

Figure 1: Wall Receptacles

CARE AND MAINTENANCE

NOTICE **Before proceeding with any CLEANING activity strictly follow "Safety Information" on page 2 of this manual.**

Cleaning The Cabinet

WARNING: Unplug the cabinet before cleaning or servicing. Do not wash the cabinet with a water jet or high pressure water.

CAUTION: Do not spray or pour water into the control enclosure. To clean the cabinet, wipe with a damp cloth and dry with a towel. Use only cleaning agents approved for Aluminum and stainless steel.

CAUTION: Do not use cleaners with chlorides or phosphates as they may cause damage to Aluminum and stainless steel.

1. Make certain that the cabinet has cooled down before cleaning. Use cleaners in proper concentrations. Follow the manufacturer's directions for the cleaning product used. After using any cleaning products, thoroughly rinse all surfaces to remove residue.
2. Use a damp cloth or sponge. Mild soap suitable for Aluminum and stainless steel is acceptable. Dry with a clean towel. Wipe up spills as soon as possible and regularly clean the cabinet to avoid staining and difficult to clean conditions.

Keeping the casters free of dirt build-up will go a long way in prolonging their life. Additionally, periodic tightening of door latch and hinge screws may be required.

NOTICE **Regularly inspect the casters. Tighten loose fasteners and replace worn or damaged parts with new InterMetro approved parts. Replace worn or damaged casters immediately. Additionally, periodic tightening of door latch and hinge screws may be required.**

REVERSING THE DOOR

The door on your cabinet can be reversed to accommodate a right or left-hand opening. To reverse, follow the instructions listed below:

Note: If using a travel latch, the appropriate replacement travel latch must be purchased to allow door reversal.

1. With the door in the closed position, remove the hinge pin by driving it up and out by using a hammer and a drive pin or small diameter screwdriver.
2. Once the pins are removed grasp the door firmly and pull the latch lever, this will release the door. Set the door on an appropriate work surface. Place the door on its back surface to prevent damaging the door vent.
3. Remove the 4 hinge screws from the left side of the door and set-aside. Remove the door-mounted part of the hinges and relocate them to the opposite side of the door, Put the screws removed from the left side of the cabinet into the remaining holes on the right side of the cabinet. Tighten all screws before proceeding.
4. Remove the 2 latch screws from the right side of the door and set-aside. Remove the door latch by removing the black plastic screw covers and removing the screws holding the latch in place and relocate it to the opposite side of the door. Put the screws removed from the right side of the cabinet into the remaining holes on the left side of the cabinet. Tighten all screws before proceeding.
5. Remove the hinge screws from the left side of the cabinet and set aside. Then remove the cabinet mounted part of the hinges and spacers, and remount to the left side of the cabinet. Put the screws removed from the left side of the cabinet into the remaining holes on the right side. Tighten all screws before proceeding.
6. Remove the latch plate screws from the right side of the cabinet and set-aside. Remove the latch plate from the left side of the cabinet by removing the two mounting screws and relocate it to the opposite side. Put the screws removed from the right side into the remaining holes on the left side. Tighten all screws before proceeding.
7. Place the door in-place, aligning the door latch, and the door mounted hinge parts with the cabinet mounted hinge parts. Tap the hinge pins into place so the top of the pin is flush with top of the cabinet mounted hinge part.

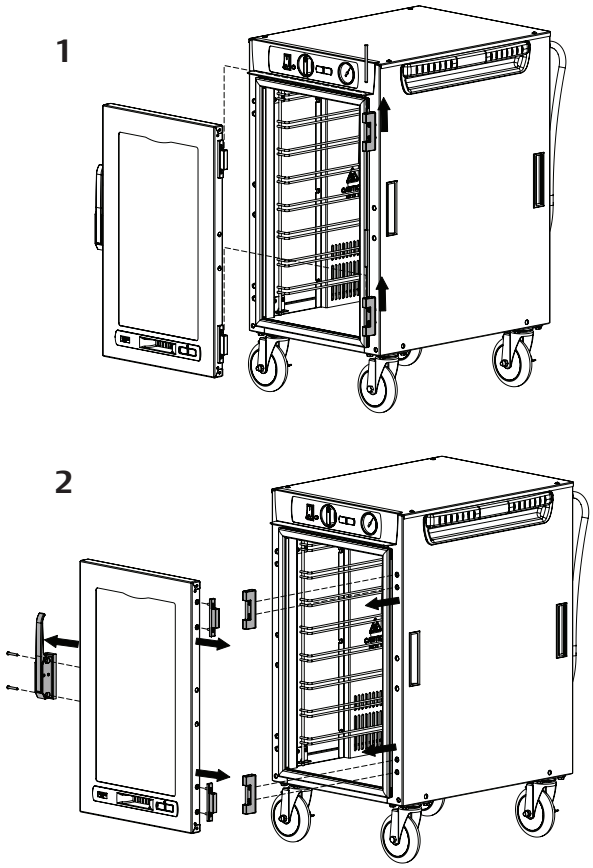

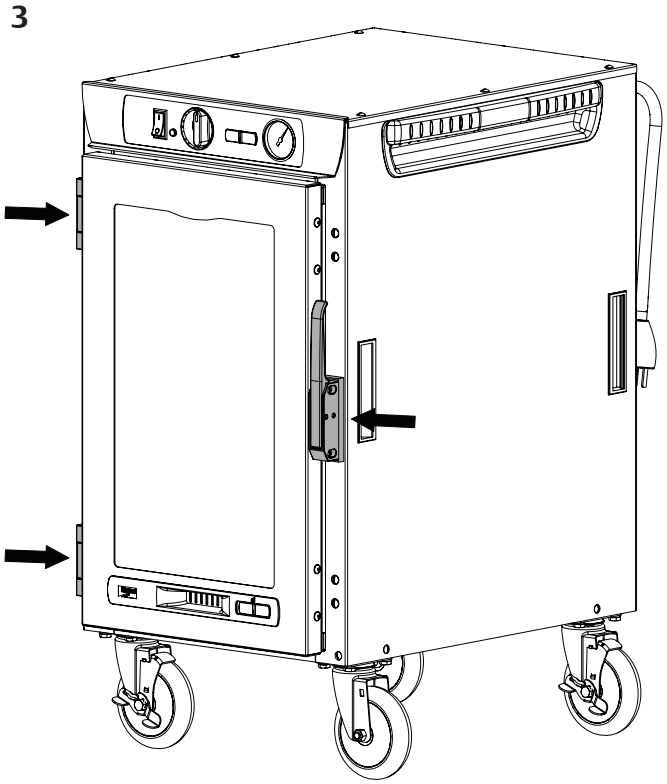

CABINET STACKING

1. **Upper unit(s) should always be countertop / stacking models**
2. **Always use stacking bracket to secure and maintain appropriate spacing and ventilation**
3. To avoid the risk of tipping, Stacked cabinets MUST NOT EXCEED 68” TOTAL HEIGHT.
4. To avoid injury, two people should be used to lift the upper cabinet(s) into place.
5. To avoid pinching injury, use caution when placing upper cabinets.
6. To avoid damage to the cabinets, DO NOT LIFT CABINETS BY USING THE DOORS

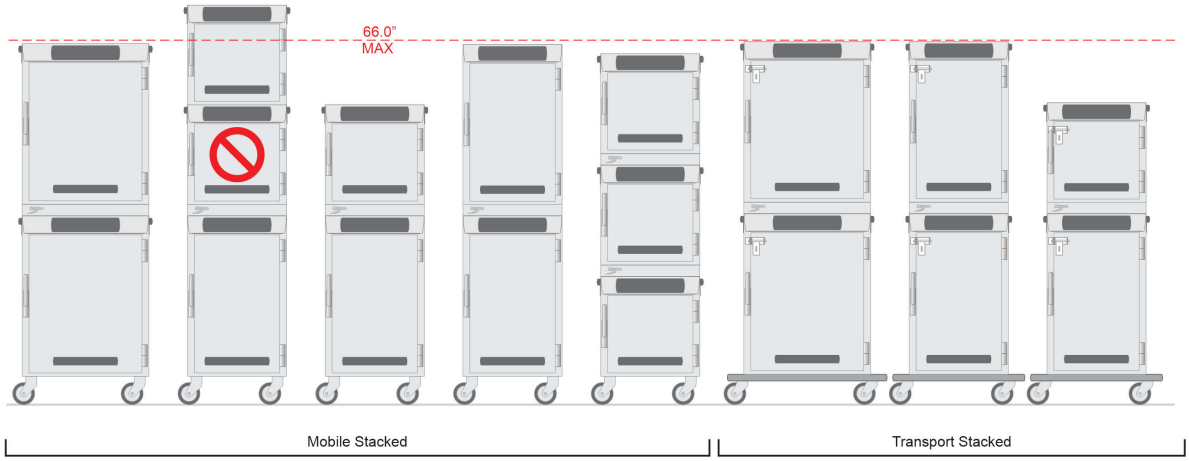

Stacking Requirements: Maximum stacked height shall never exceed 68” (1727mm). Maximum (2) N8 (2) W8, or (3) N4 cabinets per stacked unit. Stacked cabinets must maintain 2” (51mm) spacing using proper stacking kit with proper ventilation.

To Stack Hot Blox Cabinets:

1. Remove the (4) screws on corners from top panel of the lower cabinet and set-aside. (leave the top panel in-place)
2. Place stacking bracket on top of the lower cabinet as-shown.
3. Secure the stacking bracket in-place with the four (4) top panel screws.
4. Remove the four (4) lower side panel screws and set-aside.
5. Carefully lift and place the upper cabinet on top of the stacking bracket, aligning and inserting the rubber feet into the notches of the stacking bracket.
6. Secure the upper cabinet to the stacking bracket with the four (4) lower side panel screws.

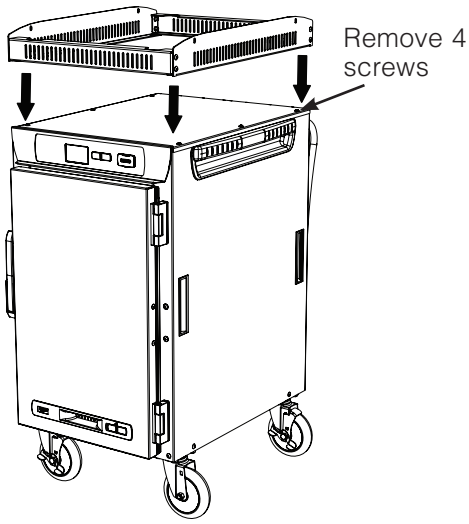

Lower Cabinet

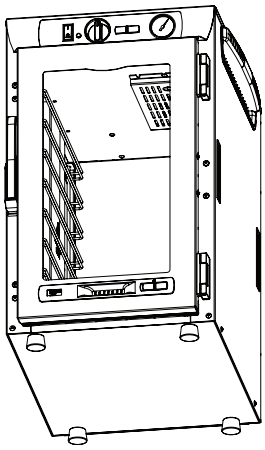

Upper Cabinet

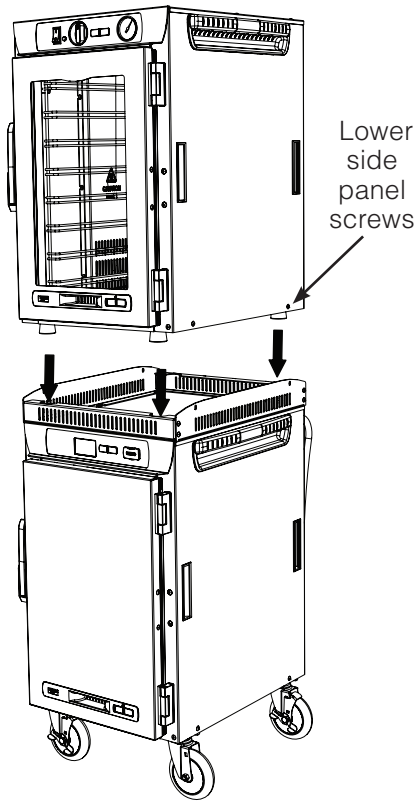

Stacking Cabinets

OPERATING INSTRUCTIONS

Warning: Some surfaces, water and escaping vapor can be hot enough to burn. Use caution when opening doors and working in and around this cabinet.

Warning: Follow all food safety guidelines. Pre-heat the cabinet to the desired temperature before putting cooked, hot food into the cabinet. This is not a re-thermalization cabinet. Food must be at the appropriate temperature before being placed into this cabinet.

Note: Before using your cabinet for the first time clean cabinet thoroughly as described below, heat the cabinet to maximum temperature for 90 minutes to burn off oils left from manufacturing process. During this process slight smoke or smell may be noticed.

CABINET AND DOOR VENT OPERATION:

All Hot Blox cabinets employ a dual vent system to help control humidity inside the cabinet. They can be configured differently depending on food holding requirements.

1. For basic “dry” holding and transport applications, it is recommended that both the door and ceiling vents are closed.
2. For moist food holding, each cabinet is equipped with a heating element under the floor. In order to create humidity, simply place a pan on the floor, add warm water, and close both the door and ceiling vents. Any style stainless steel or aluminum pan is suitable, but flatter pans with more surface area help generate more humidity (ie- 13”x18” or 18”x26” sheet pans). With a flat sheet pan filled with water, 30% RH is achievable in the 160F (71C) to 170F (77C) temperature range
3. For crispy foods, make sure both the door and ceiling vents are open. This will allow humid air given off by the food to release through the ceiling vent with the assistance of fresh air entering through the door vent to replace the exhausted humid air. Note, in most cases a pan with water should NOT be added for crispy holding, but if holding some foods like certain styles of breaded chicken for longer periods of time, it may be beneficial to add a water pan and keep the vents open to maintain internal moisture (depending on the desired external food texture).

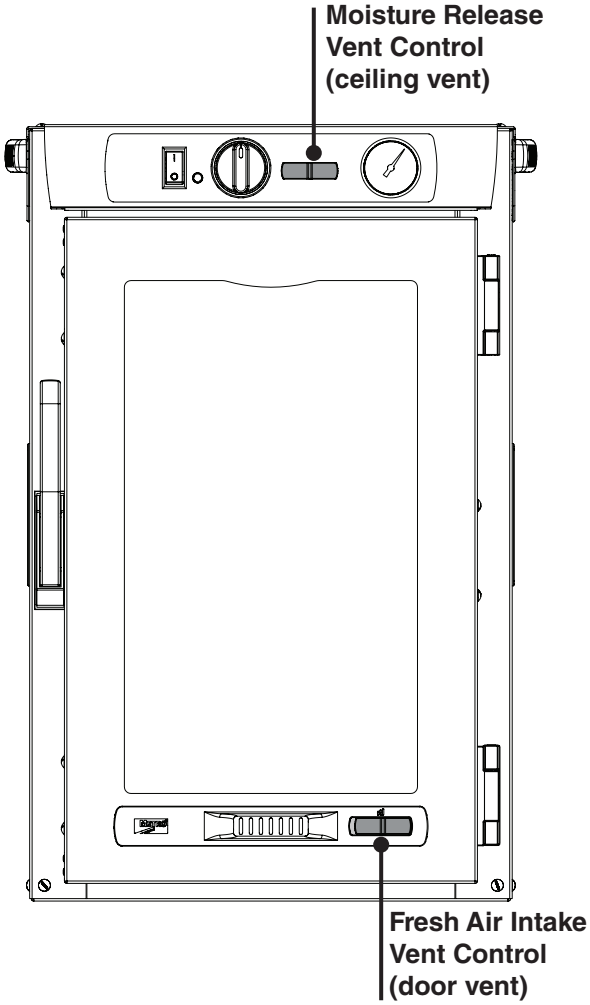

OPERATING INSTRUCTIONS - ANALOG CONTROLS

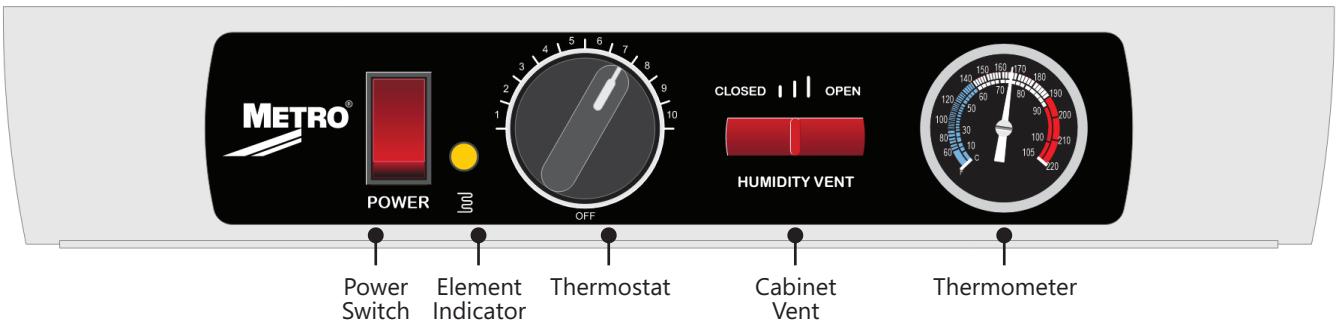

- Red ON/OFF switch is located on left side of control panel which is used to turn the cabinet on or off.
- The amber indicator light next to the switch indicates when the cabinet elements are energized. During the initial pre-heat phase this will remain on continuously. When the cabinet reaches it's set-point the light will turn off. It is normal for the thermostat to cycle on and off as the cabinet is operating.
- The thermometer indicates the internal cabinet temperature.
- Set the thermostat to the desired setting, and allow the cabinet to preheat without any food inside. The time required to reach the desired temperature is dependent upon the set point and ambient temperature where the cabinet is located. Setting 7 will produce a cabinet temperature of approximately 150°F (66° C) after allowing the cabinet to preheat for 18-35 minutes.

THIS SPACE IS KEPT INTENTIONALLY BLANK

OPERATING INSTRUCTIONS - DIGITAL CONTROLS

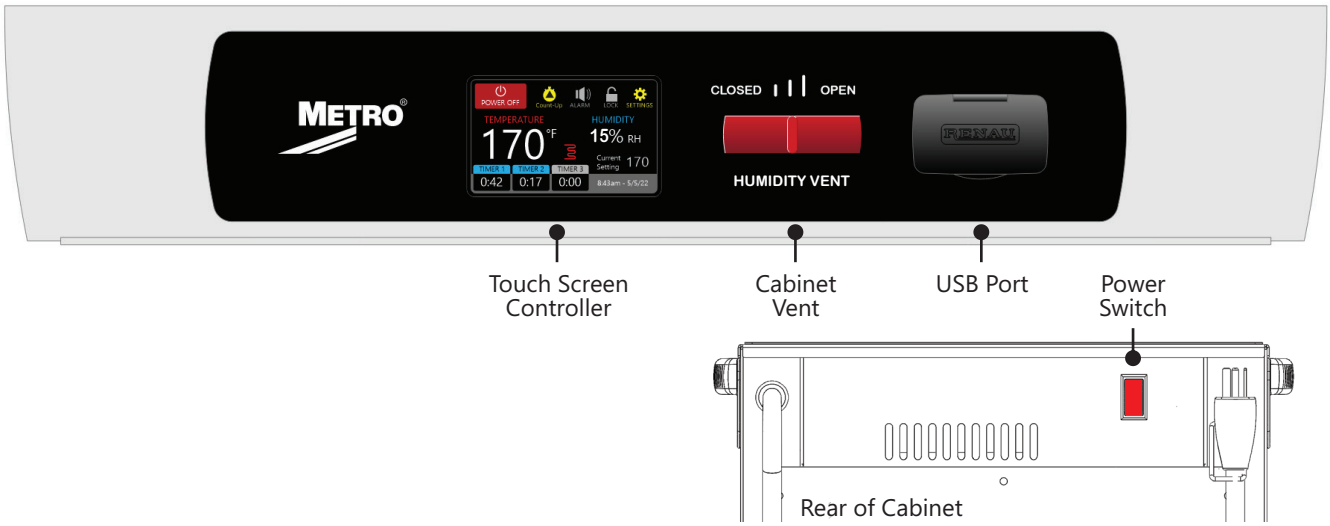

POWER-UP & PRE-HEAT

- Ensure that the Master Power switch on the rear of the cabinet is in the ON position. The touch screen will then initialize and a POWER ON button will be visible.
- When the cabinet is turned on and touch screen is active, the cabinet will cycle through the start-up sequence and begin Pre-Heat mode until the temperature set point is reached.
- The larger characters on the display show the actual cabinet temperature. The temperature set point is also visible in smaller characters. Cabinet humidity is also displayed and can be affected with the cabinet and door vents.
- To change the temperature set point, select the large temperature characters and use "+ / -" symbols.
- Select the "Settings“ button to configure Date/Time, Temperature scale, Low temperature alarm, Timers, Language, Control lock, and to access cabinet information.
- Allow the cabinet to pre-heat without food for 18-35 minutes. The time required to reach the temperature set point is dependent on the set point, the size of the cabinet, the door type (solid or clear) and the temperature of the room the cabinet is in.
- The cabinet controls will “remember” their settings when the cabinet is turned off. Therefore, when the unit is turned back on, the settings will be the same as they were during the previous use.

Low Temperature Alarm

This cabinet is equipped with a low temperature alarm system that (when enabled) will alert you if the temperature falls below the alarm set point for more than 5 minutes during operation.

- The temperature display will turn red and an audible alarm will be activated if a low temperature condition is detected.
- Go to SETTINGS/SET ALARMS to adjust the alarm settings
- If the cabinet’s TEMPERATURE set point is set below the low-temperature alarm set point, the alarm is disabled.
- The low temperature alarm is also disabled during pre-heat.

Main Display (Pre-Heat)

- After POWER ON, Pre-heat mode is active until the temperature set point is reached.
- Menu presets, Settings functions are all accessible during pre-heat.
- Temperature set point can be changed during pre-heat.

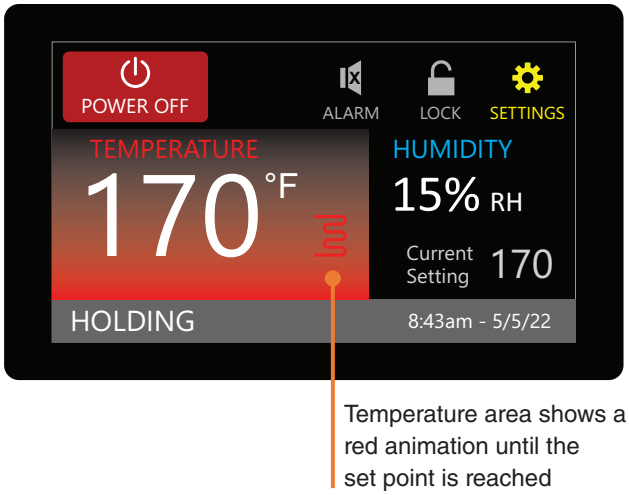

Main Display (After Pre-Heat)

After Pre-heat mode is complete the "Holding" main display screen is displayed.

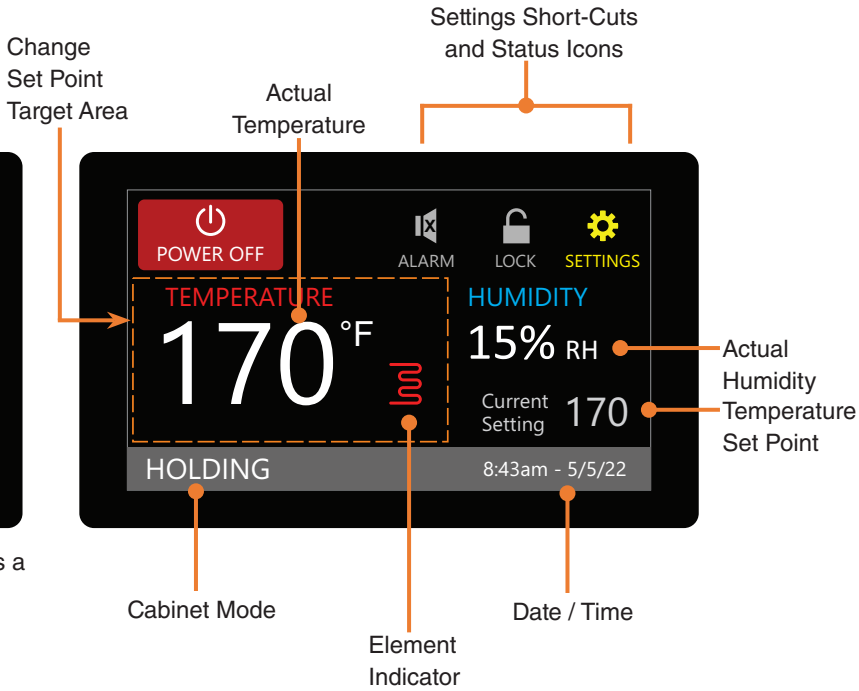

Change Set Point Screen

The change set points screen is activated by selecting the large (actual temperature) area on the main screen.

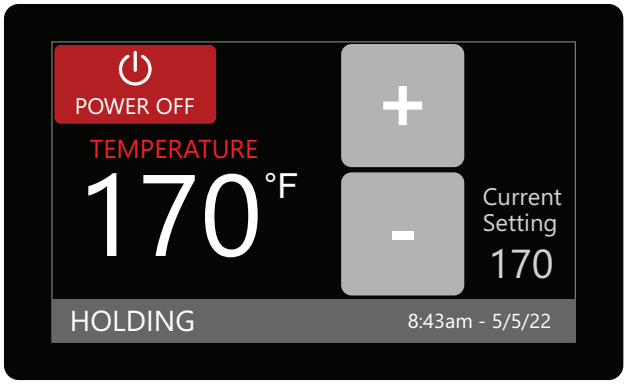

- Use the plus or minus buttons to adjust the set point. Press and hold for a more rapid adjustment.
- The new set point will be accepted after several seconds of inactivity.

Settings

Provides access to the cabinet settings and features.

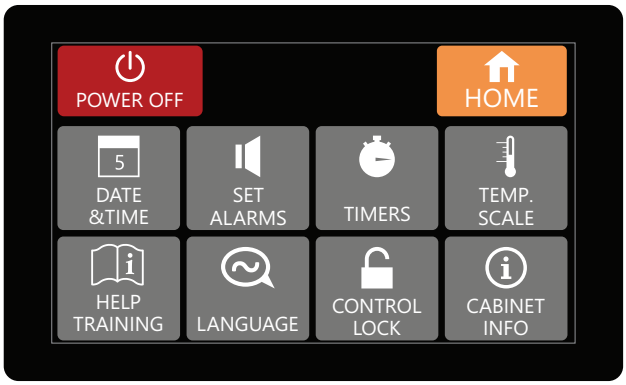

Date & Time: Change date/time set points and format.
Set Alarms: Set the low temperature alarm set point and volume.
Timers: Program and activate up to 3 count-down or count-up timers.
Temperature Scale: Change to Fahrenheit or Celsius
Help: Navigate to on-line training and information.
Language: Change Menus to English, Spanish, or French
Control Lock: Selective locking of controller functions.
Cabinet Info: Access to USB functions, and firmware information

Timers

When timers are turned on, count-up is selected by default.

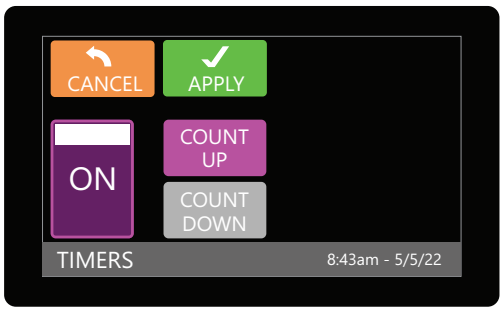

Count-Up Timer

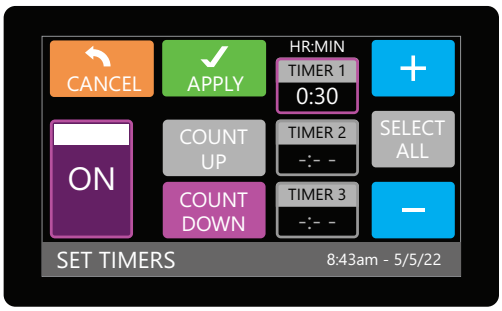

Program Count-Down Timer

When countdown is selected, all 3 timers are set to -:- - (off). Each timer may be individually selected and set with the + and - buttons.

If desired, Select "Select All" to set all timers to the same value.

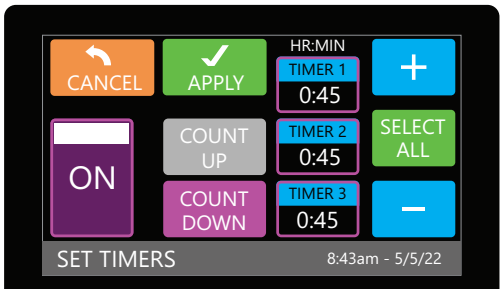

Program Count-Down Timer

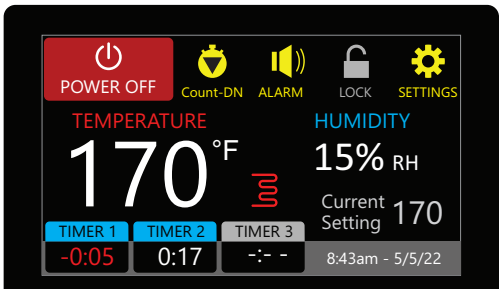

Steady-State - Count-Down Timer

When selected, timers will be activated or reset. Count-down timers will count down to 0:00 then display the

Control Lock - Help - Cabinet Info

To access more detailed instructional information and videos navigate to the Metro Support Portal at https://metro.com/support-hotblox/

To turn on the control lock, enter the default pass code (1969). The pass code can then be changed to another 4 digit pass code

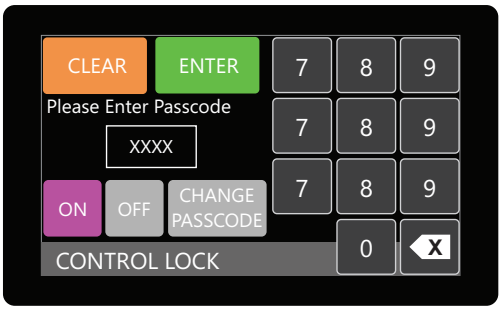

Enter or Change Pass Code

Help / Training

Or Scan the QR Code on the display with your device QR code reader

Select cabinet functions that are accessible to the user when the control lock is turned on.

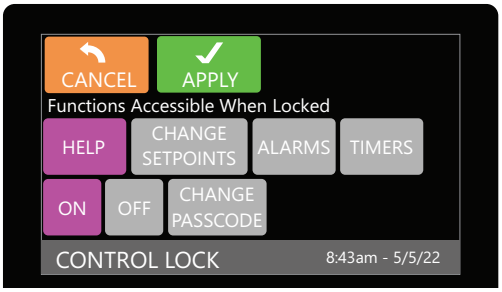

Configure Control Lock

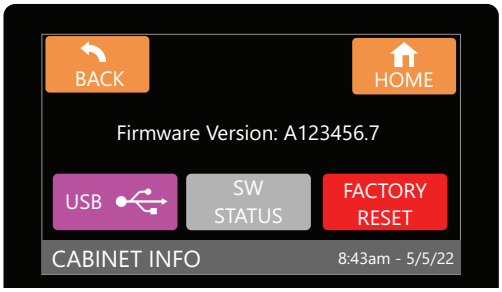

Cabinet Info

Access to Firmware version, All USB functionality, Controller communication (SW) status, and Factory reset.

BASIC TROUBLESHOOTING

WARNING: Only factory approved service agents must attempt to service, repair or replace electrical components, wiring or power cord.

1. **Controls do not work (no heat being generated or fan does not run):**
   a. Check that the cabinet is plugged-in.
   b. Check that the outlet has power.
   c. Check that the power switch is in the “On” position.
   d. Check the cabinet wiring from the power cord to the power switch and to the thermostat.
2. **Temperature Display with “---” (No reading): (Digital Models Only)**
   a. Check Single Wire Interface status.
      i. Path: SETTINGS → CABINET INFO → S/W STATUS.
      ii. If the screen shows all tick " √ " green colored then the communication harness is ok.

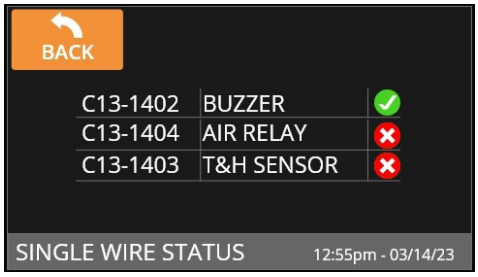

      iii. If any component and/or the Single Wire harness itself is faulty or a connector is not seated properly, then the display will show an “X” mark in a red circle to the right of any component not communicating. However, this does not mean that all of those components are faulty or have a bad connection. The first component that has a fault will prevent all downstream components from communicating. The status screen helps to begin the troubleshooting, starting with the first non-communicating device. The order of components is the controller (not shown on the display), the buzzer (C13-1402), the relay (C13-1404), and the temperature and humidity sensor (C13-1403).
3. **Temperature too hot:**
   a. During initial pre-heat, cabinet may overshoot set point.
   b. If displayed temperature exceeds 210°F (99°C):
      - Fan wiring is faulty or disconnected. Fan needs replacing.
      - The thermostat may have failed and the thermal cut-out device is controlling the temperature.
      - Thermal cut-out device may have failed.
3. **Temperature too low:**
   a. The cabinet may still be in pre-heat or recovering from the door being opened.
   b. Door is not closed or sealing properly.
   c. Worn out door gasket. Replace gasket.
   d. Fan is not circulating air:
      - Fan wiring is faulty or disconnected.
4. **No heat generated**
   When power is on, amp draw for 120V units should be approximately 7.3 amps and 3.6 amps for 220-240V models.
      - Air heater element may be faulty.
      - Surface element may be faulty.
      - The wiring to the surface element may be faulty or disconnected.
      - The wiring to the air heater element may be faulty or disconnected.
      - Thermostat may be faulty.
      - The thermal cut out may be open or have a disconnected wire coming to it or going from it to the element.

SERVICE and REPLACEMENT PARTS

(BOTH 120V & 220-240V)

WARNING: Only factory approved service agents must attempt to service, repair or replace electrical components, wiring or power cord.

Item/	Part No.	Description
1	RPC13-1430	Fan, 120V
	RPC13-1431	Fan, 240V
2	RPC13-375	Master Power Switch
3	RPHBC-CORD-120V	Power Cord, 120V
	RPHBC-CORD-240V	Power Cord, 240V
4	RPC13-1415	Strain Relief
5	RPC13-1436	Thermal cut-out
6	RPC13-096	Terminal Block
7	RPC13-367	Tubular Heating Element, 120V 675W
	RPC13-369	Tubular Heating Element, 240V 675W
8	RPC13-1380A	Foil Heating Element, 120V 200W
	RPC13-1380B	Foil Heating Element, 240V 200W
9	RPC06-913	Thermostat Knob
10	RPC09-213	Thermostat Mounting Cup
11	RPC13-1432	Thermostat
12	RPC13-246	Amber Indicator Light
13	RPC13-1433	Digital Control Screen
14	RPC13-1402	Digital Control Sound Module
15	RPC13-1401	Digital Control USB Module
16	RPC13-1404	Digital Control Relay Module
17	RPC13-1405	Digital Control Power Supply
18	RPC13-1403	Digital Control Temp-Humd Sensor
-	RPC13-1408	USB Wire Harness
	RPC13-1434	Main Wire Harness
19	RPC07-055	Sensor Grommet
20	RPHB-SCLP	Analog Sensor Clamp Kit
21	RPC07-110A	Door Gasket, 15.24" x 13.74" (N4 models)
	RPC07-110B	Door Gasket, 15.24" x 24.74" (N8 & N16 models)
	RPC07-110C	Door Gasket, 20.24" x 24.74" (W8 & W16 models)
22	RPC06-1394	Hinge Spacer

Item/	Part No.	Description
23	RPC14-119	Hinge (Single)
24	RPC14-118A	Door handle
	RPC14-118	Optional Offset Door Latch
25	RPC06-872	Pocket handles (2)
26	RPC02-382	2" Swivel Brake Caster
	B5DNB	5" Brake Caster
	RPQC02-248	6” Swivel Brake Caster
27	RPC02-381	2" Swivel Caster
	B5DN	5" Swivel Caster
	RPQC02-247	6” Swivel Caster
28	RPHBC-N4SDR	N4 Solid Door
	RPHBC-N4CDR	N4 Clear Door
	RPHBC-N8SDR	N8 Solid Door
	RPHBC-N8CDR	N8 Clear Door
	RPHBC-W8SDR	W8 Solid Door
	RPHBC-W8CDR	W8 Clear Door
29	RPHBC-N4SLIDES	N4 Wire Slide Set
	RPHBC-N8SLIDES	N8 Wire Slide Set
	RPHBC-W8SLIDES	W8 Wire Slide Kit
30	RPHBC-TRVL	Travel latch for right hand hinged door
	RPHBC-LTRVL	Travel latch for left hand hinged door
31	RPC5-SSLEG-1	Stationary Equipment Leg (Qty. 1)
32	RPC06-068	Bumper Corner
33	RPHBC-N8S-BMPS	N8 Side Bumper Strip
	RPHBC-W8S-BMPS	W8 Side Bumper Strip
34	RPHBC-N8FB-BMPS	N8 Front - Back Bumper Strip
	RPHBC-W8FB-BMPS	W8 Front - Back Bumper Strip
35	RPHBC-DRVENT	Door vent assembly
36	RPC13-218	Thermometer
37	RPC07-112	Rubber Foot

SERVICE and REPLACEMENT PARTS (ANALOG CONTROLS + OTHER COMMON PARTS)

(BOTH 120V & 220-240V)

WARNING: Only factory approved service agents must attempt to service, repair or replace electrical components, wiring or power cord.

*Check data plate at rear of cabinet to confirm cabinet voltage before selecting replacement parts.

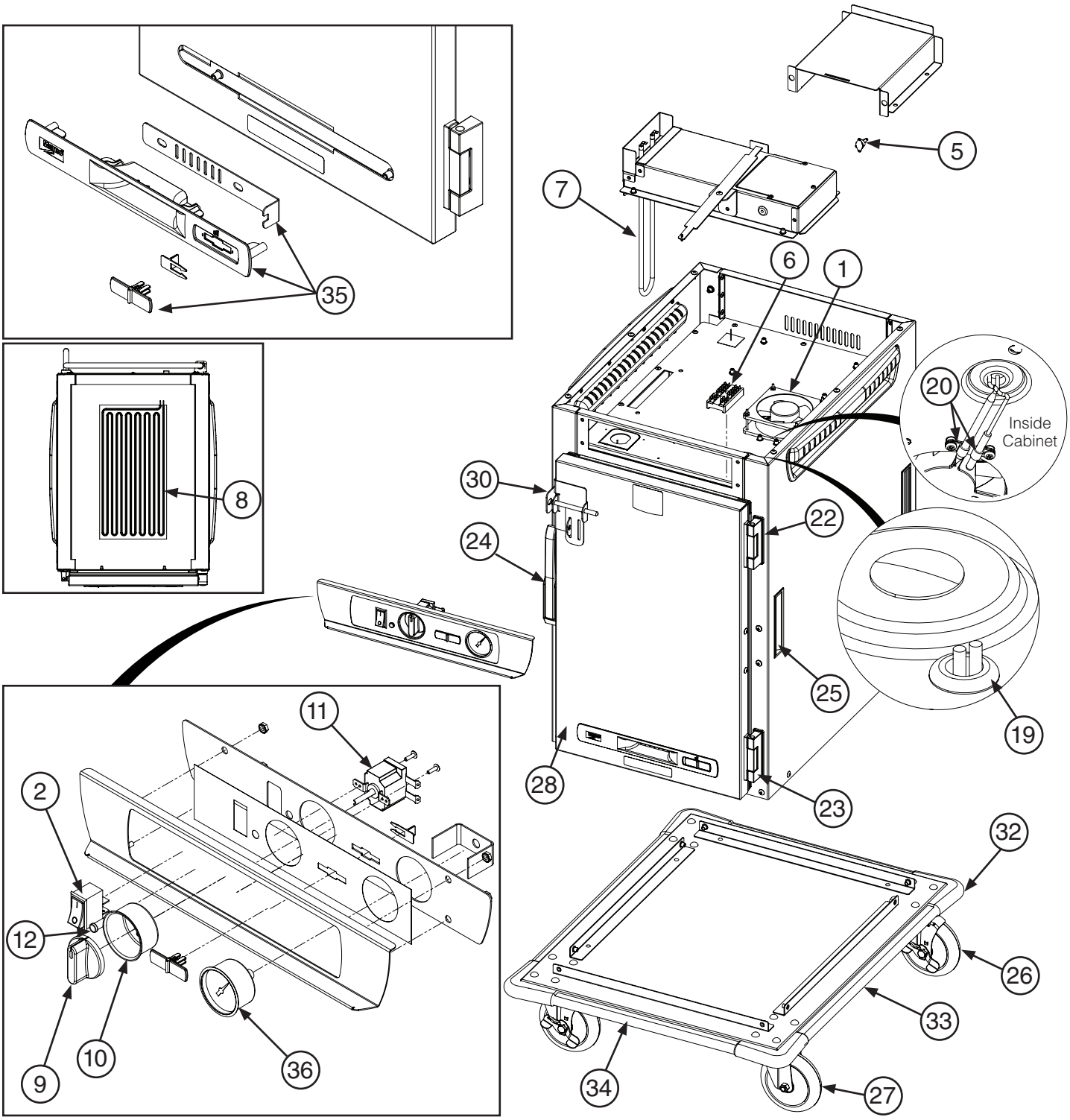

SERVICE and REPLACEMENT PARTS (DIGITAL CONTROLS + OTHER COMMON PARTS)

(BOTH 120V & 220-240V)

WARNING: Only factory approved service agents must attempt to service, repair or replace electrical components, wiring or power cord.

*Check data plate at rear of cabinet to confirm cabinet voltage before selecting replacement parts.

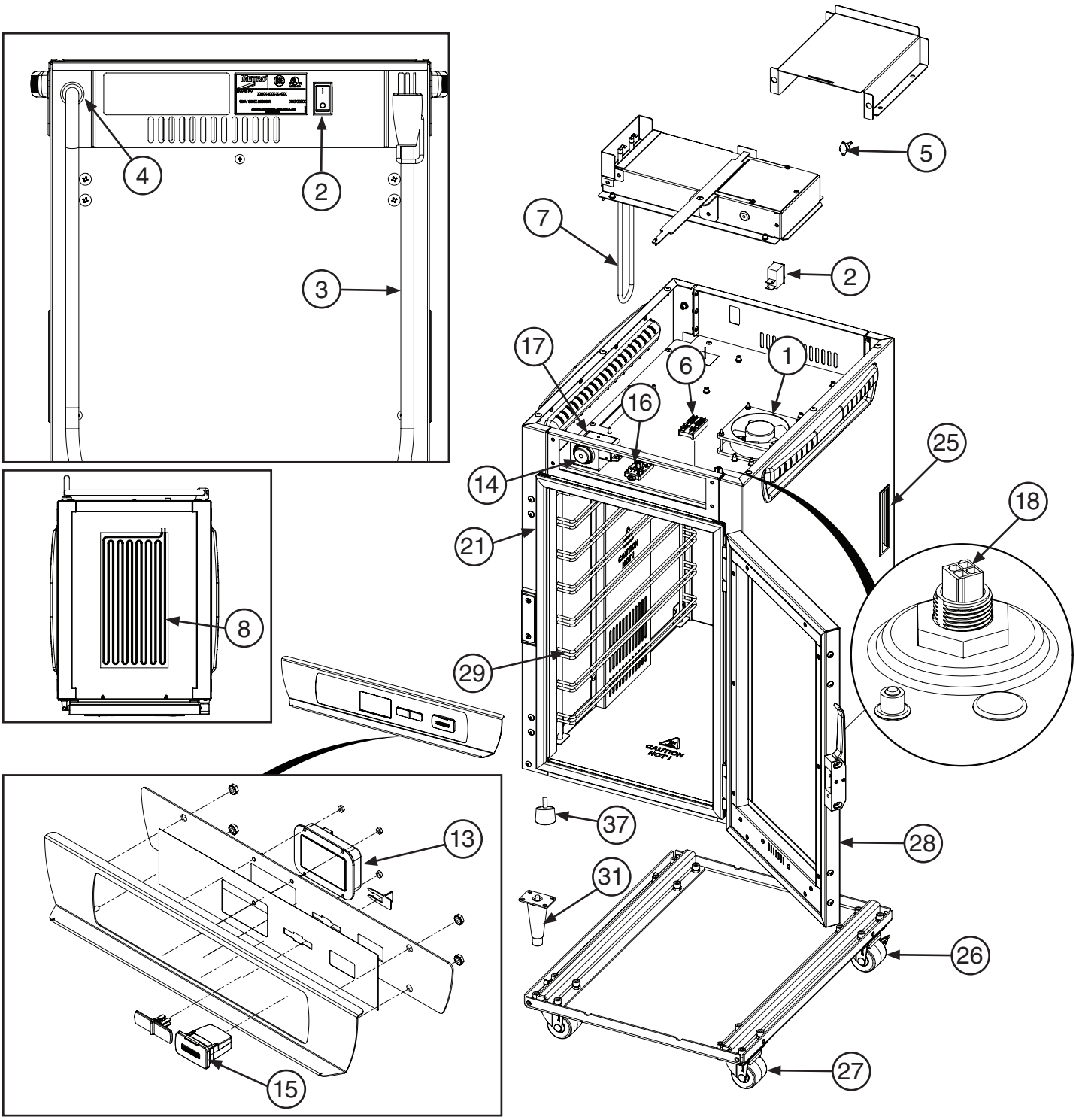

ANALOG WIRING DIAGRAM

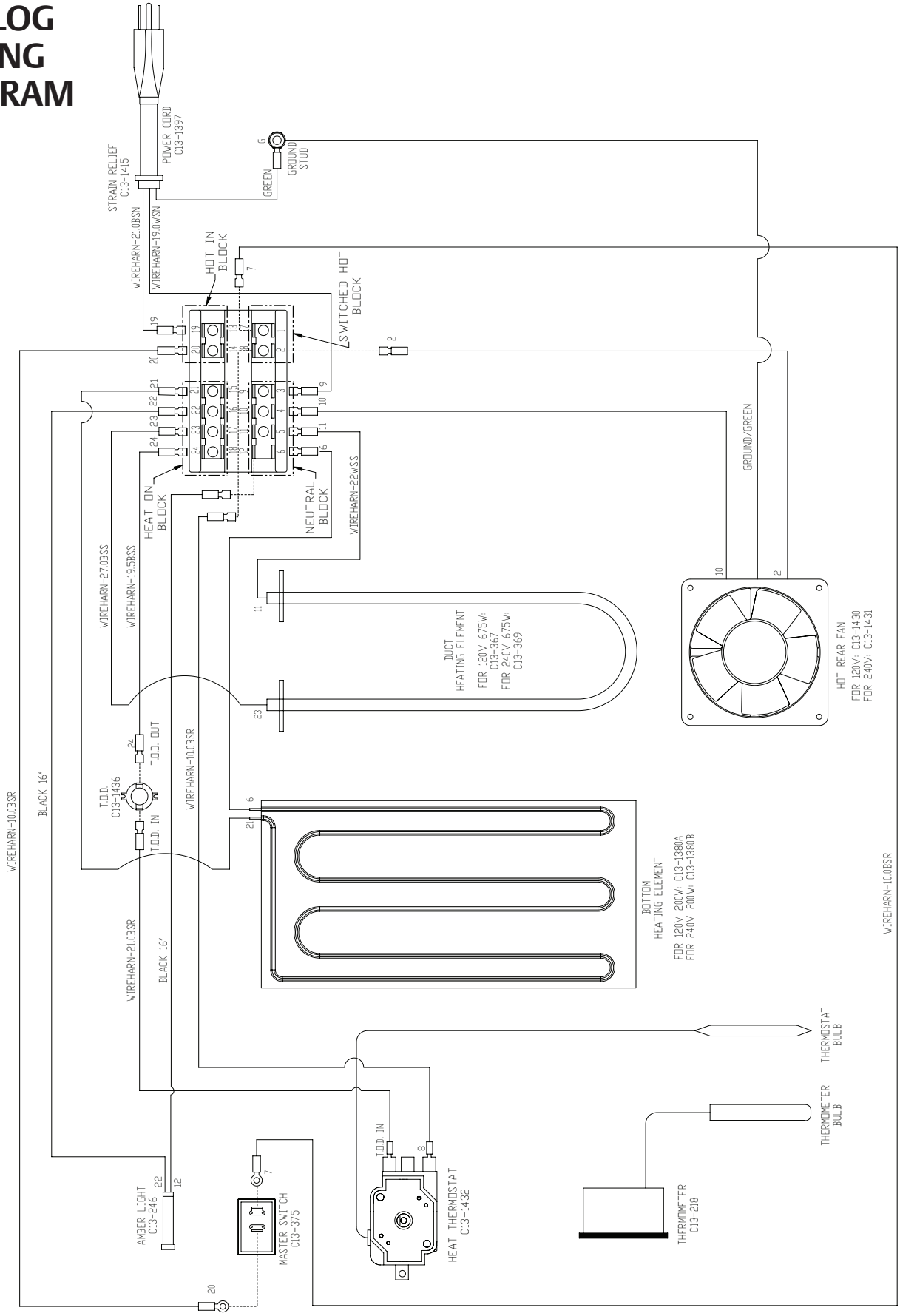

DIGITAL WIRING DIAGRAM

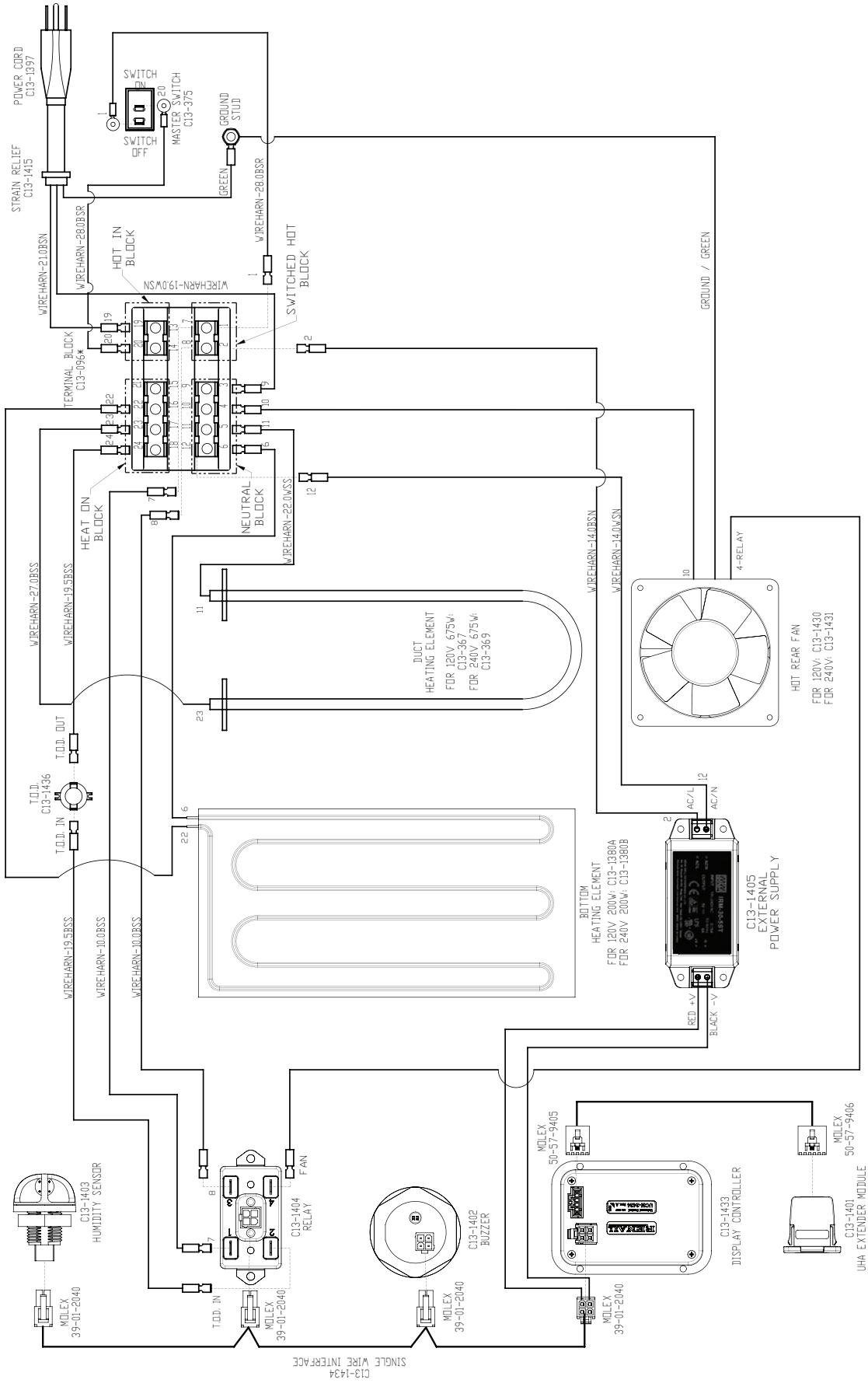

Warranty

WARRANTY, EXCLUSION OF WARRANTIES AND LIMITATION OF LIABILITY. InterMetro Industries Corporation (hereinafter referred to as "Seller") warrants to the original purchaser that all products in its catalog, or custom products, delivered hereunder will be free from defects in workmanship and material. THE FOREGOING WARRANTY IS EXCLUSIVE AND IN LIEU OF ALL OTHER WARRANTIES, EXPRESS, IMPLIED OR STATUTORY, INCLUDING ANY WARRANTY OF MERCHANTABILITY OR FITNESS FOR A PARTICULAR PURPOSE. This Warranty shall be for a period of one (1) year from the date of shipment from Seller's warehouse or factory. If any product delivered hereunder does not meet the Warranty specified above, providing the product has not been altered in any way by anyone other than Seller's factory-authorized representative, and assuming normal and proper use and maintenance, Seller will, at its option, repair or replace any part or material it determines, upon inspection, to be defective; provided however, that a charge for labor will be made except during a period of one (1) year from the date of original shipment from Seller's warehouse or factory. No product, or part thereof, is to be returned to Seller without prior written approval from Seller's factory. All exchanges and replacement shipments will be F.O.B. Seller's factory. Warranties for equipment or articles not manufactured by the Seller are solely the warranties of the manufacturers thereof and they are hereby assigned to the purchaser without recourse to the Seller.

SELLER'S LIABILITY FOR ANY CLAIM OF ANY KIND, WHETHER BASED ON CONTRACT, NEGLIGENCE OR STRICT LIABILITY IN TORT, AND BY WHOMEVER MADE, FOR ANY DIRECT, INDIRECT, INCIDENTAL OR CONSEQUENTIAL LOSS, DAMAGE OR INJURY, RESULTING TO THE PURCHASER OR ANY THIRD PARTIES, arising out of, connected with or resulting from this Agreement, or from the performance or breach thereof, or from the manufacture, sale, delivery, resale, installation, inspection, repair or use of any product covered by or furnished under this Agreement, WHETHER OR NOT CAUSED BY SELLER'S NEGLIGENCE, SHALL IN ALL EVENTS BE EXCLUSIVELY LIMITED TO THE COST OF CORRECTING DEFECTIVE, DAMAGED OR NON-CONFORMING PARTS OR MATERIAL AS HEREIN PROVIDED, and upon the expiration of one (1) year, all such liability shall terminate.

SELLER DOES NOT AUTHORIZE any person to assume for it any obligations or liabilities greater than or different than those set forth in this Warranty. The terms under which any of Seller's products may be resold must be limited in accordance with this Warranty.

THIS AGREEMENT, and all the rights and obligations arising hereunder, shall be construed in accordance with, and be governed by, the law of the Commonwealth of Pennsylvania, U.S.A.

TO INSURE WARRANTY implementation, return the completed registration card within 15 days of cabinets' receipt to: InterMetro Industries Corp., Wilkes-Barre, PA 18705

InterMetro Industries Corporation
Wilkes-Barre, PA 18705

03/2023

For online warranty registration, please go to www.metro.com/service-support/thermal-cabinets to register electronically

THIS SPACE IS KEPT INTENTIONALLY BLANK

THIS SPACE IS KEPT INTENTIONALLY BLANK

© 2023 InterMetro Industries Corporation, Wilkes-Barre, PA 18705
L01-683 REV 03/23

METRO®

We put space to work.®

an Ali Group Company

GROUP

The Spirit of Excellence